Flymo®

Mini Trim

Original Instructions

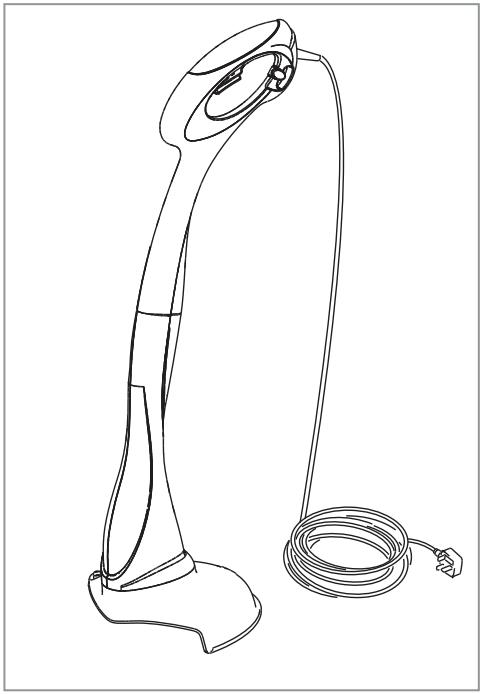

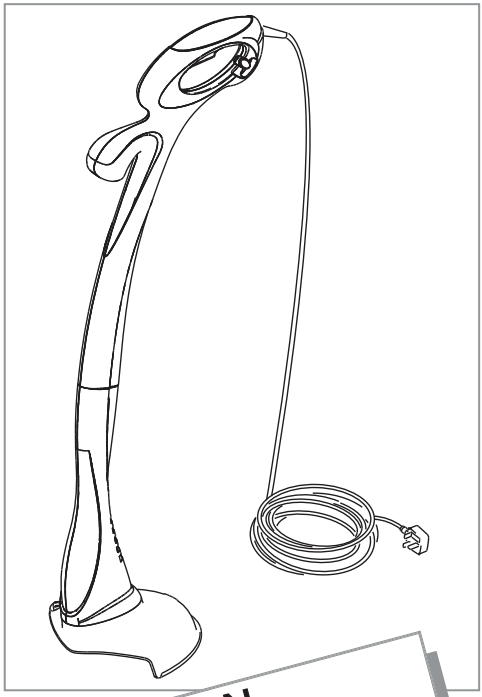

IMPORTANT INFORMATION
Read before use
& retain for future reference

WARNING

IMPORTANT Please register your product warranty on line.
To register your warranty and for all your parts requirements please visit
www.flymo.com
For all other enquiries
0844 844 4558 **UK** 1800 882 350 **ROI**
customer.services@husqvarna.co.uk

Carton Contents

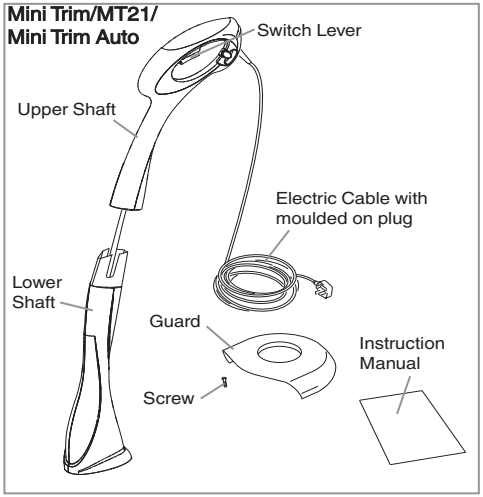

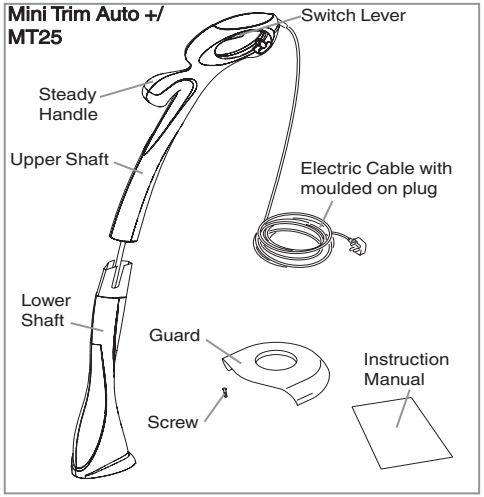

IMPORTANT ! Please check the contents of the carton are correct **BEFORE** assembling your new product.
IF ANY PARTS ARE MISSING CONTACT:-
Husqvarna UK Ltd. Customer Service Department direct
Telephone : 0844 844 4558 **UK** 1800 882 350 **ROI** Fax : 01325 302530

Safety

Please note: This manual covers various products. Please read the user instructions carefully to fully identify, assemble and use the features that apply to your trimmer.

WARNING. When using the product the safety rules must be followed. For your own safety and that of bystanders please read these instructions before operating the product. Please keep the instructions safe for later use.

Explanation of Symbols on the product

Warning

Read the user instructions carefully to make sure you understand all the controls and what they do.

Keep others, including children, pets and bystanders outside the 10 metre hazard zone. Stop the trimmer immediately if you are approached.

The use of eye protection is recommended to protect against objects thrown by the cutting line.

To avoid the possibility of electric shock, do not use in damp or wet conditions.

Switch off! Remove plug from mains before adjusting, cleaning or if cable is entangled or damaged.

Warning: The cutting line continues to rotate after the machine has been switched off.

General

1. This product is not intended for use by persons (including children) with reduced physical, sensory or mental capabilities, or lack of experience and knowledge, unless they have been given supervision or instruction concerning the use of the product by a person responsible for their safety. Children should be supervised to ensure that they do not play with the product. Local regulations may restrict the age of the operator.
2. Never allow children or people unfamiliar with the instructions to use the machine.
3. Stop using the machine while people, especially children, or pets are nearby.
4. Only use the trimmer in the manner and for the functions described in these instructions.
5. Never operate the trimmer when you are tired, ill or under the influence of alcohol, drugs or medicine.
6. The operator or user is responsible for accidents or hazards occurring to other people or their property.

Electrical

AVOID ACCIDENTAL STARTING, REMOVE PLUG FROM MAINS AND KEEP FEET AWAY FROM THE SWITCH LEVER WHEN:- CLEANING AROUND THE INSIDE OF THE SAFETY GUARD, REMOVING OR REFITTING SPOOL CAP, MANUALLY FEEDING OR REPLACING NYLON LINE

1. The British Standards Institute recommend the use of a Residual Current Device (R.C.D.) with a tripping current of not more than 30mA. Even with a R.C.D. installed 100% safety cannot be guaranteed and safe working practice must be followed at all times. Check your R.C.D. every time you use it.
2. Before use, examine cable for damage, replace it if there are signs of damage or ageing.

3. Do not use the trimmer if the electric cables are damaged or worn.
4. Immediately disconnect from the mains electricity supply if the cable is cut, or the insulation is damaged. Do not touch the electric cable until the electrical supply has been disconnected. Do not repair a cut or damaged cable. Replace it with a new one.
5. Your extension cable must be uncoiled, coiled cables can overheat and reduce the efficiency of your trimmer.
6. Keep the cable clear of the cutting area and obstacles at all times.
7. Do not pull cable around sharp objects.
8. Always switch off at the mains before disconnecting any plug, cable connector or extension cable.
9. Never pull on the cable to disconnect any of the plugs.
10. Switch off, remove plug from mains and examine electric supply cable for damage or ageing **before** winding cable for storage. Do not repair a damaged cable, replace it with a new one. Use only our replacement cable.
11. Always wind cable carefully, avoiding kinking.
12. Use only on AC mains supply voltage shown on the product rating label.
13. Our trimmers are double insulated to EN60335. Under no circumstance should an earth be connected to any part of the trimmer.

Preparation

1. While using your product always wear substantial footwear and long trousers.
2. Before using the machine and after any impact, check for signs of wear or damage and repair as necessary.
3. Inspect the area to be cut before each use. Remove all objects such as stones, broken glass, nails, wire, string etc, which can be thrown or become entangled in the trimmer head.
4. Before use, inspect the area for wildlife, especially hedgehogs.
5. Check that the cutting head is fitted correctly.

Use

1. Use the trimmer only in daylight or good artificial light.
2. Avoid operating your trimmer in wet grass, where feasible.
3. Take care in wet grass, you may lose your footing.
4. On slopes, be extra careful of your footing and wear non-slip footwear.
5. Do not walk backwards when trimming, you could trip. Walk never run.
6. Keep cutting head below waist level.
7. Switch off before pushing the trimmer over surfaces other than grass.
8. Never operate the trimmer with damaged guards or without guards in place.
9. Never fit metal cutting elements.
10. Keep hands and feet away from the cutting means at all times and especially when switching on the motor.
11. Never pick up or carry a trimmer by the cable.
12. Do not lean over the trimmer guard - objects may be thrown by the cutting line.
13. Remove the plug from the mains :

- before leaving the trimmer unattended for any period;
- before clearing a blockage;
- before checking, cleaning or working on the appliance;
- if you hit an object. Do not use your trimmer until you are sure that the entire trimmer is in a safe operating condition;
- if the trimmer starts to vibrate abnormally. Check immediately. Excessive vibration can cause injury.

Maintenance and storage

1. Keep all nuts, bolts and screws tight to be sure the trimmer is in safe working condition.
2. Replace worn or damaged parts for safety.
3. Only use the replacement cutting line specified for this product.
4. Only use replacement parts and accessories recommended by Husqvarna UK Ltd.
5. After any maintenance in dealing with the cutting line, always return the product to its normal operating position before switching on.
6. Clean unit with a dry cloth. Never use metal objects to clean the unit.
7. Inspect and maintain the trimmer regularly. Any repairs must be carried out by an authorised repairer.
8. Store in a cool dry place and out of reach of children. Do not store outdoors.
9. Allow the product to cool for at least 30 minutes before storing.

Cables

IMPORTANT

Use only 1.00mm^2 size cable up to 40 metres length maximum.

Maximum rating:

1.00mm^2 size cable, 10 amps 250 volts AC.

YOUR TRIMMER IS SUPPLIED WITH AN ELECTRIC MAINS CABLE WIRED DIRECTLY INTO THE PRODUCT.

1. Mains Cables and Extension Cables are available from your local Approved Service Centre.
2. Do not wire an extension cable directly to your product yourself. Please contact your local Approved Service Centre for further information on the connectors and kits available.
3. Only use extension cables specifically designed for outdoor use.
4. If the supply cable is damaged, it must be replaced by the manufacturer, its service agent or similarly qualified persons in order to avoid a hazard.

CONNECTORS

Our connectors are suitable for use with 2 core cable only. Under no circumstances should these connectors be used for earthed products.

All of our connectors and cables are of splashproof construction. They are not waterproof and must not be left outside permanently nor should they be submerged or immersed in water. Do not let cable lay or trail through pools of water or splashed with water from hose pipes.

MAINS PLUG REPLACEMENT

- **If the plug supplied is cut off it should be destroyed. There is an electric shock hazard if a cut off plug is inserted into a 13 amp socket.**

1. **No earth required**. Our products are double insulated to EN60335 and under no circumstances should an earth be connected to any part of the product.
2. **Ensure the mains voltage suits your product.**
3. **IMPORTANT!**

The wires in the mains lead are coloured in accordance with the following code:

BLUE	-	NEUTRAL
BROWN	-	LIVE

The wire which is coloured BLUE must be connected to the Terminal which is marked with the letter 'N' or coloured BLACK. The wire which is coloured BROWN must be connected to the Terminal which is marked with the letter 'L' or coloured RED.

4. It is important that the outer sheath is clamped correctly into the 3-pin plug.
5. If in doubt consult your local Service Repairer or qualified electrician before the machine is used.
6. **A 13 Amp fuse must be fitted to the Mains Plug.**
7. The normal plug fuse and household fuse only protect the electrical equipment and are not a safeguard against electrocution.

If your product is hard wired i.e. non-detachable mains electric cable, a conversion kit and extension cable is available from all Approved Service Centres which can be found in your local Yellow Pages.

Assembly Instructions

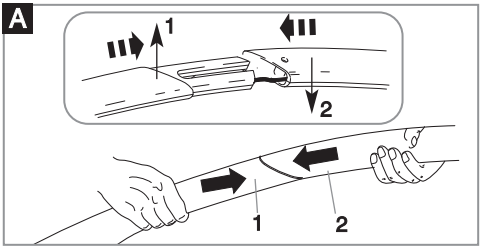

Shaft Assembly (A)

1. Locate the lower shaft **(A1)** into the upper shaft **(A2)**.
2. Grasp firmly and hold steady the lower shaft. Locate the upper shaft and snap together firmly.

- **The unit is correctly assembled when the gap between the upper and lower shaft has been closed.**

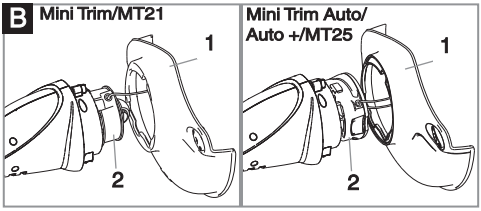

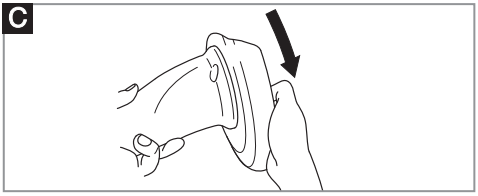

Safety Guard Assembly (B) & (C)

1. Locate the safety guard **(B1)** over the cutting head **(B2)**. Ensure the nylon line is fed through the hole in the safety guard as illustrated in **fig B**.
2. Push into location and turn safety guard in the direction illustrated in **Fig C**, until a click is heard and the safety guard is securely locked in position.
3. With the screw provided, insert into the guard as illustrated in **Fig D** and tighten to secure.

- **ENSURE THE SAFETY GUARD IS SECURELY IN PLACE BY ATTEMPTING TO TWIST GUARD.**

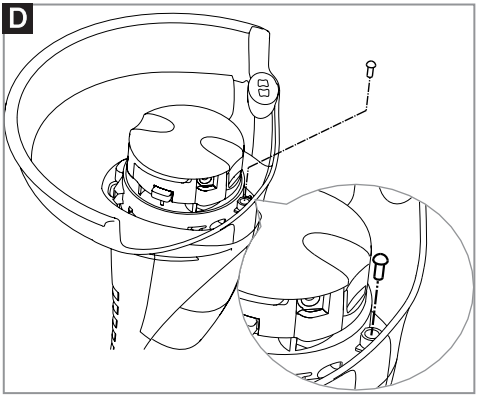

Cable Restraint (E1) & (E2)

1. Form loop in mains cable and push the loop through the slot as illustrated in picture **(E1)**.
2. To secure, position loop over the hook and pull the cable back through the slot as illustrated in picture **(E2)**.

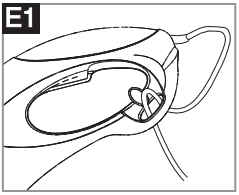

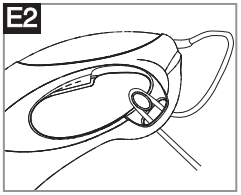

Starting and Stopping

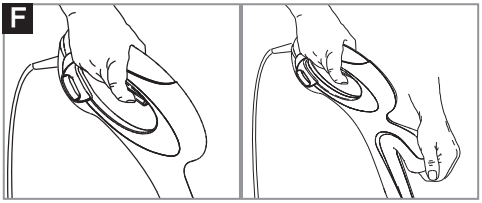

WARNING
Cutting head continues to rotate after the trimmer has been switched off.

To start your trimmer
Squeeze the switch lever **(F)**.

To stop your trimmer
Release the switch lever **(F)**.

How to Trim

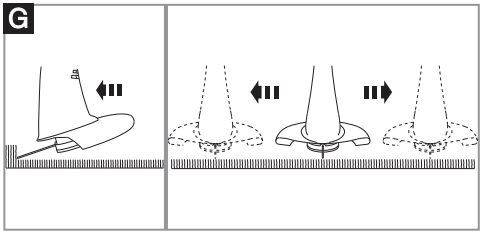

WARNING: The use of eye protection is recommended. Do not lean over the trimmer guard whilst trimming, objects may be thrown by the cutting line. Do not allow cutting head to rest on the ground. Do not overload your trimmer. Overloading can be avoided by making sure the motor speed does not drop unduly. Disconnect the mains electricity supply before attempting any maintenance or adjustment.

1. Cut with cutting line at an angle using the tip **(G)**.
2. Swing trimmer in and out of the cutting area taking small cuts **(G)**.

Manual Line Feed System

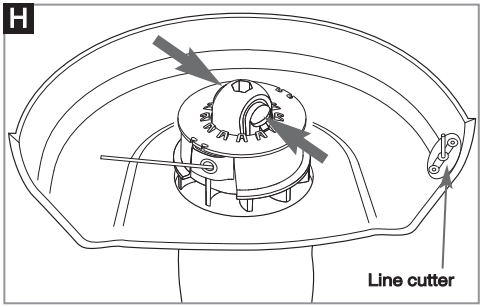

To feed the nylon line

1. Press and hold the two latches **(H)**.
2. Gently pull the line until it reaches the line cutter.
3. Release the two latches. Check that the spool is locked in position.
4. If too much line has been fed out, press the two latches and turn the spool anti-clockwise until the line is at the desired length.

To remove spool

1. Press and hold the two latches.
2. Pull spool out of spoolholder **(J)**.

When refitting the spool

1. Keep all areas of the spool and spoolholder clean. Failure to do so may prevent the spool from being securely located in the spoolholder.
2. Make sure the line is placed through the slot in the spoolholder **(K)**.
3. Place spool into spoolholder and press down into place.
4. **Check that the spool is correctly fitted by trying to remove the spool without depressing the latches (K1).**

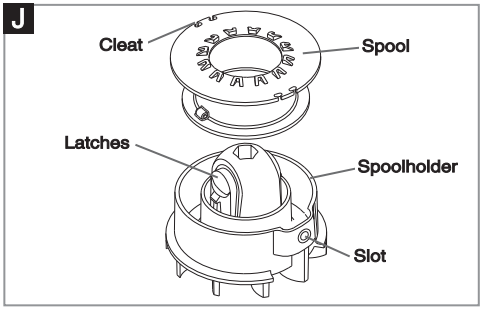

To replace nylon line

Replacement line is available from most Husqvarna UK Ltd. stockists. You can buy it either as spool and line complete or as nylon line only.

To replace spool and line complete

1. Remove old spool.
2. Release line from cleat. Unwind approximately 100mm of line and feed through slot in spoolholder **(K)**.
3. Re-fit spool into spoolholder. Check that the spool is locked in position.

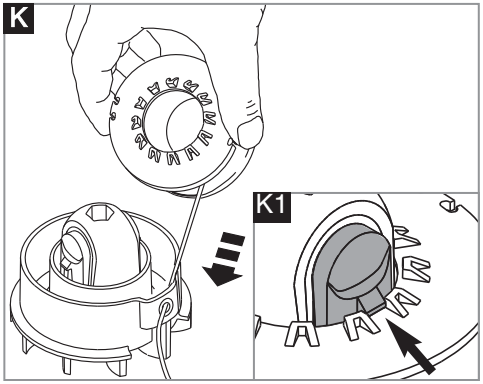

To replace nylon line on spool

1. Take approximately 5 metres of line line and insert into one of the line lock holes in the spool **(L)**.
2. Wind line onto spool in the direction of the arrows on the top of the spool. Care should be taken to ensure that the line is neatly coiled on the spool (L).
3. Leave approximately 100mm of line unwound and feed through slot in spoolholder **(K)**.
4. Replace spool into spoolholder.

Ensure spool is correctly fitted.

Remember! Your trimmer is designed to use only nylon line with a maximum diameter of 1.5mm. Use only genuine Husqvarna UK Ltd. nylon line.

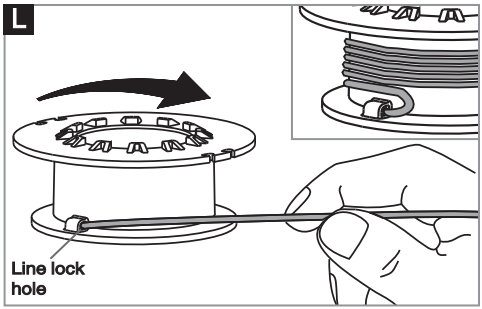

Fault Finding Hints

WARNING! Disconnect from the mains electricity supply before attempting any maintenance or adjustment.

1. **Line too short.**
   Feed out line.
2. **Line broken inside of spoolholder.**
   Remove spool and re-thread line.
3. **Line jammed on spool.**
   Remove spool and rewind line to remove crossed loops.
4. **Poor performance**.
   Ensure the inside of the spoolholder is clean and free from debris.
5. **Line snaps continuously.**
   Use only tip of nylon line to trim. If symptoms still persist, change spool and line.
6. **Line will not pull out.**
   Check that line has been released from cleat.
7. **IF FAULT PERSISTS**
   Contact Husqvarna UK Ltd. Customer Service. Telephone 0844 844 4558.

Automatic Line Feed System

How the automatic line feed works (M)

1. When initially switching on the trimmer, a small length of line is fed out.
2. A 'clattering' noise will be heard when the nylon line hits the line cutter. **DO NOT BE ALARMED this is quite normal.** After approximately 5 seconds the line will be cut to the correct length and the noise will reduce as the motor reaches full speed.
- **Make sure the motor is up to full speed before trimming.**
3. If the noise of the nylon line being cut cannot be heard, more line will need to be fed out.
4. To feed more line, it is first necessary to to allow the motor to stop completely, then re-start, allowing the motor to reach full speed.
5. Repeat step 4. until you hear the line hitting against the cutter. (Do not repeat this procedure more than 6 times)
6. If problems are experienced with the automatic line feed refer to Fault Finding Chart.

To manually feed the nylon line (N)

1. If required line can be fed out manually.
2. To operate, press and release manual line feed button, whilst gently pulling on one of the lines until the line reaches the line cutter.
3. When the required amount of line is fed out, gently pull on the second line (there is no need to press the manual line feed button again).
4. If the line extends past the line cutter, too much line has been fed out.
5. If too much line is fed out, remove the spool cap and click spool anti-clockwise until the line is at the desired length.

To remove spool cap

1. Press and hold in the two cap release latches. **(P)**.
2. **Pull** cap away from the spoolholder. **(P)**.

When refitting the spool cap

1. Keep all areas of the cap and spoolholder clean. Failure to do so may prevent the cap being securely located in the spoolholder.
2. Replace the cap, **pressing firmly DOWN** towards the spoolholder to ensure cap is fully located.
3. Check that the cap is correctly fitted by trying to remove it without depressing the two latches.

To replace nylon line.

For your convenience it is recommended you buy spool and line complete. Nylon line only is also available. Both are available from Husqvarna UK Ltd. stockists.

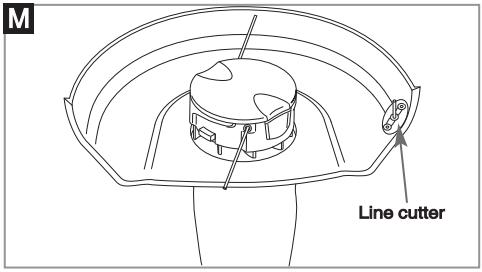

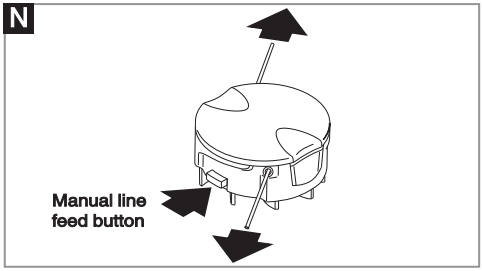

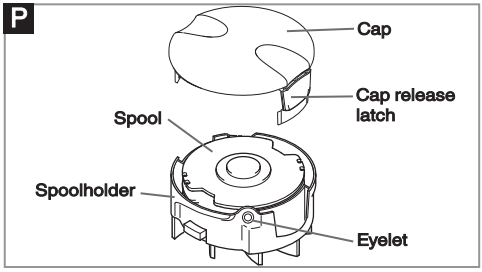

To fit spool and line complete:

1. Remove old spool.
2. Place new spool into spoolholder with **cut out areas of the spool in line with eyelets** as shown in **figure Q**.
3. Release one line from cleat and feed line through eyelet **(Q).**
4. Repeat for second line.

- **Ensure spool is fully located by gently rotating it during fitment, whilst keeping the spoolholder steady.**

5. Refit the cap.

To fit nylon line only:

- **Remember!** Your Trimmer is designed to use only nylon line with a **maximum diameter of 1.5mm.** Use only genuine Husqvarna UK Ltd. nylon line.

1. **IMPORTANT - Always wind the line onto the upper section of the spool first.**
   Take approximately 5 metres of line. Insert 15mm of line into one of the holes in the upper section of the spool **(R)** and wind line in the direction of the arrows on the top of the spool. Leave approximately 100mm of line unwound and place into cleat as illustrated in **figure R**. Repeat on lower section of spool.
2. Care should be taken to ensure that the line is neatly coiled on the spool. Failure to do so will impair the efficiency of the automatic line feed.
3. Then fit spool as described in **'To fit spool and line complete'**, section above.

- **Always return the product to its normal operating position before switching on.**

Q

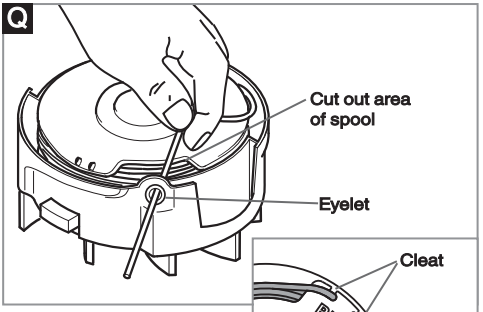

R

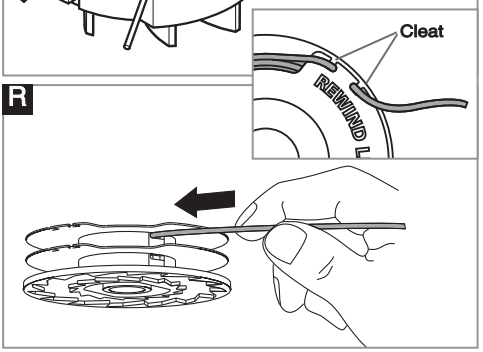

Fault Finding Chart (Automatic Line Feed only)

WARNING Disconnect from the mains electricity supply before attempting any maintenance or adjustment.

FAULT	CHECK		ACTION
LINE NOT FEEDING OR LINE TOO SHORT OR TRIMMER VIBRATES	Is the automatic line feed working?	No	Manually feed out line.
	Is the line fed out and visible? Has line been removed from cleat?	No	Remove cap and spool, free line and re-fit spool and cap.
	Is the manual line feed working?	No	The line may be jammed on the spool. Rewind line to remove crossed loops. Check that line is in correct section of spool.
CONTINUOUS CLATTERING NOISE	Has the motor reached full speed before use?	No	Allow the motor to reach full speed before use
	Has too much line been fed out?	Yes	Rewind line.
	Is the line cutter missing from the safety guard?	Yes	**Contact your local approved Service Centre or Husqvarna UK Ltd. Customer Service.**
LINE SNAPS CONTINUOUSLY	Are you using the trimmer correctly?	?	Only use tip of nylon line to trim.
	Is the line jamming on the spool?	Yes	Rewind the line on the spool, if symptoms still persist, change spool and line.
IF NONE OF THE ABOVE OR IF FAULT PERSISTS	**Contact Husqvarna UK Ltd. Customer Service Telephone : 0844 844 4558 UK 1800 882 350 ROI**		

Replacement Parts

Spool and Line	
Reference no.:	**FLY031**
Part no.:	**513106090**

Maintenance

After you have finished using your trimmer follow the procedure below:

1. **Disconnect from the mains electricity supply.**
2. Never clean your trimmer with water, cleaning fluids, or solvents, just remove debris with a suitable tool, a soft brush or dry cloth.
3. Using a soft brush, clean around the inside of the safety guard, the cutting head and the motor housing air vents. **(Fig S, T)**.
4. Inspect the trimmer carefully, especially the parts of the cutting head.
5. If your trimmer is damaged in any way contact your local approved service centre.

- **Never use a damaged trimmer.**

6. Wind cable carefully to avoid kinking.
7. Store in a cool, dry place and out of reach of children.

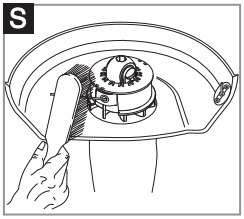

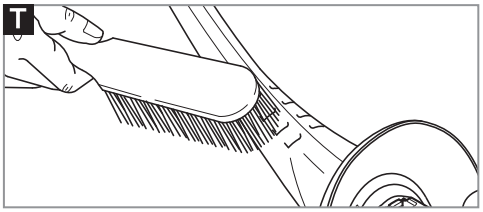

Environmental Information

- Awareness of the environment must be considered when disposing of 'end-of-life' product.
- If necessary, contact your local authority for disposal information.

The symbol on the product or on its packaging indicates that this product may not be treated as household waste. Instead it shall be handed over to the applicable collection point for the recycling of electrical and electronic equipment.

By ensuring this product is disposed of correctly, you will help prevent potential negative consequences for the environment and human health, which could otherwise be caused by inappropriate waste handling of this product. For more detailed information about recycling of this product, please contact your local council office, your household waste disposal service or the shop where you purchased the product.

Service Recommendations

- Your product is uniquely identified by a silver and black product rating label.
- We strongly recommend that your product is serviced at least every twelve months, more often in a professional application.

Guarantee & Guarantee Policy

If any part is found to be defective due to faulty manufacture within the guarantee period, Husqvarna UK Ltd., through its Authorised Service Repairers will effect the repair or replacement to the customer free of charge providing:

(a) The fault is reported directly to the Authorised Repairer.
(b) Proof of purchase is provided.
(c) The fault is not caused by misuse, neglect or faulty adjustment by the user.
(d) The failure has not occurred through fair wear and tear.
(e) The machine has not been serviced or repaired, taken apart or tampered with by any person not authorised by Husqvarna UK Ltd.
(f) The machine has not been used for hire.
(g) The machine is owned by the original purchaser.
(h) The machine has not been used commercially.
* This guarantee is additional to, and in no way diminishes the customers statutory rights.

Failures due to the following are not covered, therefore it is important that you read the instructions contained in this Operator's Manual and understand how to operate and maintain your machine:

Failures not covered by guarantee

* Replacing Nylon Line.
* Failures as a result of not reporting an initial fault.
* Failures as a result of sudden impact.
* Failures as a result of not using the product in accordance with the instructions and recommendations contained in this Operator's Manual.
* Machines used for hire are not covered by this guarantee.
* The following items listed are considered as wearing parts and their life is dependent on regular maintenance and are, therefore not normally subject to a valid warranty claim: Nylon Line, Spool and Line, Electric Mains Cable.

* **Caution!**
Husqvarna UK Ltd. does not accept liability under the warranty for defects caused in whole or part, directly or indirectly by the fitting of replacement parts or additional parts that are not either manufactured or approved by Husqvarna UK Ltd., or by the machine having been modified in any way.

EC Declaration of Conformity

Husqvarna AB, 561 82, Huskvarna, Sweden

Declare under our sole responsibility that the product(s);

Category.....**Electric Lawn Trimmer**
Type(s) .....**ET21, ET23DX, ET23+DX, ET25+DX**
Identification of Series.....**See Product Rating Label**
Year of Construction.....**See Product Rating Label**

Conforms to the essential requirements & provisions of the following EC Directives:
98/37/EC (until 28.12.09), 2006/42/EC (from 29.12.09), 2004/108/EC, 2000/14/EC
based on the following EU harmonized standards applied:
EN60335-1, EN60335-2-91, EN786, EN50366, EN55014-1, EN61000-3-2, EN61000-3-3

The maximum A weighted sound pressure level L_{pA} at the operator's position, recorded on a sample of the above product(s) corresponds to the **Level** given in the table.

The maximum hand / arm vibration weighted value measured according to EN ISO 5349 on a sample of the above product(s) corresponds to the **Value** a_h given in the table.

2000/14/EC: The Measured Sound Power L_{WA} & Guaranteed Sound Power L_{WA} values are according to the tabulated figures.

Conformity Assessment Procedure..... Annex VI
Notified Body..... Intertek, Cleeve Road
Leatherhead, Surrey
KT22 7SB, England

Newton Aycliffe 13/11/2009
M.Bowden
Research & Development Director
Husqvarna UK Ltd.
Keeper of technical documentation

CE

Type	ET21	ET23DX	ET23+DX	ET25+DX
Width of Cut (cm)	21	23	23	25
Speed of Rotation of Cutting Device (rpm)	13,000	11,500	11,500	10,500
Power (kW)	0.23	0.25	0.25	0.30
Measured Sound Power L_{WA} (dB(A))	91	91	91	94
Guaranteed Sound Power L_{WA} (dB(A))	93	93	93	95
Level (dB(A))	77.4	82.9	82.9	82.3
Value a_h (m/s^2)	4.59	4.85	4.85	4.5
Uncertainty K of a_h (m/s^2)	1.5	1.5	1.5	1.5
Weight (Kg)	2.0	2.0	2.3	2.3

Our policy of continuous improvement means that the specification of products may be altered from time to time without prior notice.
Copyright © 2008 Flymo S.A. All rights reserved. Flymo® and other product and feature names are registered or unregistered trademarks of Flymo S.A.

Husqvarna UK Ltd.
Aycliffe Industrial Park
NEWTON AYCLIFFE
Co.Durham DL5 6UP
ENGLAND
Telephone - 01325 302302 Fax - 01325 310339

5051963-05